Nice

ROX600
ROX1000

For sliding gates

EN - Instructions and warnings for installation and use

Nice

CONTENTS

GENERAL WARNINGS:
SAFETY - INSTALLATION - USE 2

1 - PRODUCT DESCRIPTION AND INTENDED USE 3

2 - OPERATING LIMITS 3

3 - INSTALLATION 4

4 - ELECTRICAL CONNECTIONS
4.1 - Types of electrical cables 9
4.2 - Electrical cable connections 9

5 - STARTING THE AUTOMATION AND CHECKING THE CONNECTIONS
5.1 - Hooking the automation up to the mains 11
5.2 - Learning the devices 11

6 - TESTING AND COMMISSIONING
6.1 - Testing 12
6.2 - Commissioning 12

7 - PROGRAMMING
GLOSSARY 13
7.1 - Adjustable parameters: Trimmer (TL - TP - F) 14
7.2 - Programmable functions 14
7.3 - Integrated radio receiver 16

8 - DETAILED INFORMATION
8.1 - Adding or removing devices 19
8.2 - Power for external devices 20
8.3 - Oview programmer connections 20
8.4 - Total deletion of the receiver's memory 20
8.5 - Special functions 20

9 - DIAGNOSTICS 21

10 - BASIC TROUBLESHOOTING 22

11 - SCRAPPING 22

12 - MAINTENANCE 23

13 - TECHNICAL SPECIFICATIONS 23

EU DECLARATION OF CONFORMITY 24

User manual *(end user version)* 25

GENERAL WARNINGS: SAFETY - INSTALLATION - USE (instructions translated from Italian)

⚠ **These warnings are copies straight from the Regulations and as far as possible applicable to the product in question.**

ATTENTION **Important safety instructions. Follow all instructions as improper installation may cause serious damage**
ATTENTION **Important safety instructions. It is important for you to comply with these instructions for your own and other people's safety. Keep these instructions**

- Before commencing the installation, check the "Technical characteristics" (in this manual), in particular whether this product is suitable for automating your guided part. If it is not suitable, DO NOT continue with the installation
- The product cannot be used before it has been commissioned as specified in the chapter on "Testing and commissioning"

ATTENTION **According to the most recent European legislation, the implementation of an automation system must comply with the harmonised standards provided by the Machinery Directive in force, which enables declaration of the presumed conformity of the automation. Taking this into account, all operations regarding connection to the electricity grid, as well as product testing, commissioning and maintenance, must be performed exclusively by a qualified and skilled technician!**

- Before proceeding with the installation of the product, check that all the materials are in good working order and suited to the intended applications
- This product is not intended to be used by persons (including children) whose physical, sensory or mental capacities are reduced, or who lack the necessary experience or skill
- Children must not play with the appliance
- Do not allow children to play with the fixed control devices of the product. Keep the remote controls away from children.

ATTENTION In order to avoid any danger from inadvertent resetting of the thermal cut-off device, this appliance must not be powered through an external switching device, such as a timer, or connected to a supply that is regularly powered or switched off by the circuit

- Provide a disconnection device (not supplied) in the plant's power supply grid, with a contact opening distance permitting complete disconnection under the conditions dictated by overvoltage category III
- Handle the product with care during installation, taking care to avoid crushing, denting or dropping it, or allowing contact with liquids of any kind. Keep the product away from sources of heat and naked flames. Failure to observe the above can damage the product, and increase the risk of danger or malfunction. Should this happen, stop installation immediately and contact Customer Service
- The manufacturer assumes no liability for damage to property, items or persons resulting from non-compliance with the assembly instructions. In such cases the warranty for material defects is excluded
- The weighted sound pressure level of the emission A is lower than 70 dB(A)
- Cleaning and maintenance to be carried out by the user must not be carried out by unsupervised children
- Before working on the system (maintenance, cleaning), always disconnect the product from the mains power supply
- Check the system periodically, in particular all cables, springs and supports to detect possible imbalances, signs of wear or damage. Do not use if repairs or adjustments are necessary, since installation failure or an incorrectly balanced door may cause injury
- The packing materials of the product must be disposed of in compliance with local regulations
- When operating a biased-off switch, make sure that other persons are kept away
- When operating the gate, keep an eye on the automated mechanism and keep all bystanders at a safe distance until the movement has been completed
- Do not operate the product if anyone is working nearby; disconnect its power supply before permitting such work to be done
- If the power cable is damaged, it must be replaced by the manufacturer or by an appointed servicing company or similarly qualified person in order to prevent any form of risk

INSTALLATION WARNINGS

- Prior to installing the drive motor, check that all mechanical components are in good working order and properly balanced, and that the automation moves correctly
- If the gate or door being automated has a pedestrian gate, then the system must include a control device that will inhibit the operation of the motor when the pedestrian gate is open
- Make sure that the control devices are kept far from moving parts but nonetheless in a visible position.
  Unless a selector is used, the control devices must be installed at a height of at least 1.5 m and must not be accessible
- That windows, having a gap exceeding 200 mm when open, are to be closed using a biased-off switch if the opening movement is controlled by a fire-sensing system
- Ensure that entrapment between the driven part and the surrounding fixed parts due to the opening movement of the driven part is avoided
- Permanently fix the label concerning the manual release adjacent to its actuating member
- After installing the drive motor, make sure that the mechanism, protective system and all manual manoeuvres operate properly

1 PRODUCT DESCRIPTION AND INTENDED USE

ROX is an electromechanical gearmotor intended for automating residential sliding gates: it is equipped with an electronic control unit with integral 433.92 MHz radio receiver with FLO, FLOR, O-CODE, HCS SMILO, coding.

⚠ CAUTION! – All uses other than the intended use described and use in environmental conditions other than those described in this manual should be considered improper and forbidden!

The ROX line includes various products, whose main differences are described in Table 1.

Table 1 - Comparison of the main features of the ROX gearmotor

	ROX600	ROX1000	ROX1000/V1
Gate limit (m)	8	8	10
Weight limit (kg)	600	1000	1000
Power (V~)	230	230	120
Nominal power (W)	300	350	350
Peak thrust (Nm)	18	24	24
corresponding to force (N)	500	670	670
Rated torque (Nm)	9	9	12
corresponding to force (N)	250	250	330
Work cycle (cycles / hour)	20	20	25

Notes: 1 kg = 9.81N (example: 600N = 61 kg)

2 APPLICATION LIMITS

The effective suitability of ROX to automate a particular sliding gate depends on the friction as well as other correlated factors, such as ice, that could interfere with the movement of the gate.
Measure the force required to move the gate through its entire stroke and check that this does not exceed 25% of the 'maximum force' (chapter 12 - technical specifications): this leaves a suitable margin for unfavourable climatic conditions which can increase friction.

Table 2 – Application limits

	ROX600		ROX1000		ROX1000/V1	
Gate width (m)	**max No. of cycles / hour**	**max No. of consecutive cycles**	**max No. of cycles / hour**	**max No. of consecutive cycles**	**max No. of cycles / hour**	**max No. of consecutive cycles**
Up to 4	40	20	40	20	60	30
4 ÷ 6	25	13	25	13	30	15
6 ÷ 8	20	10	20	10	24	12
8 ÷ 10	-	-	-	-	16	8
10 ÷ 12	-	-	-	-	-	-

⚠ Caution! Any other use or use with dimensions greater than specified is non-conforming. Nice declines all liability for damage and injury resulting for non-conforming use.

3 INSTALLATION

⚠ Important! Before installing the product, refer to chapters 2 and 12 (technical specifications).

Fig. 1 shows the contents of the package: check that everything is present and correct.

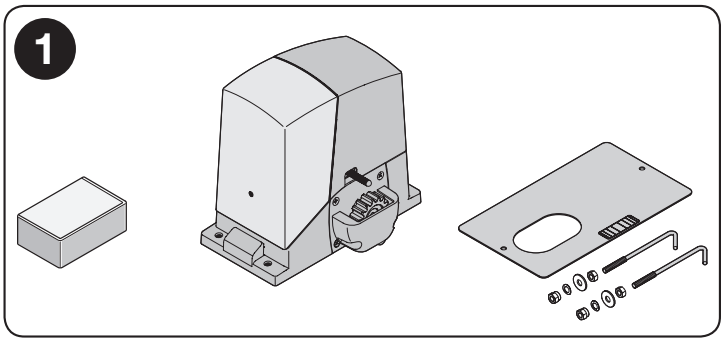

Fig. 2 shows the location of the components of a typical installation using Nice accessories:

a - ROX gearmotor
b - photocells
c - posts for photocells
d - Key switch / digital keypad
e - flasher
f - rack

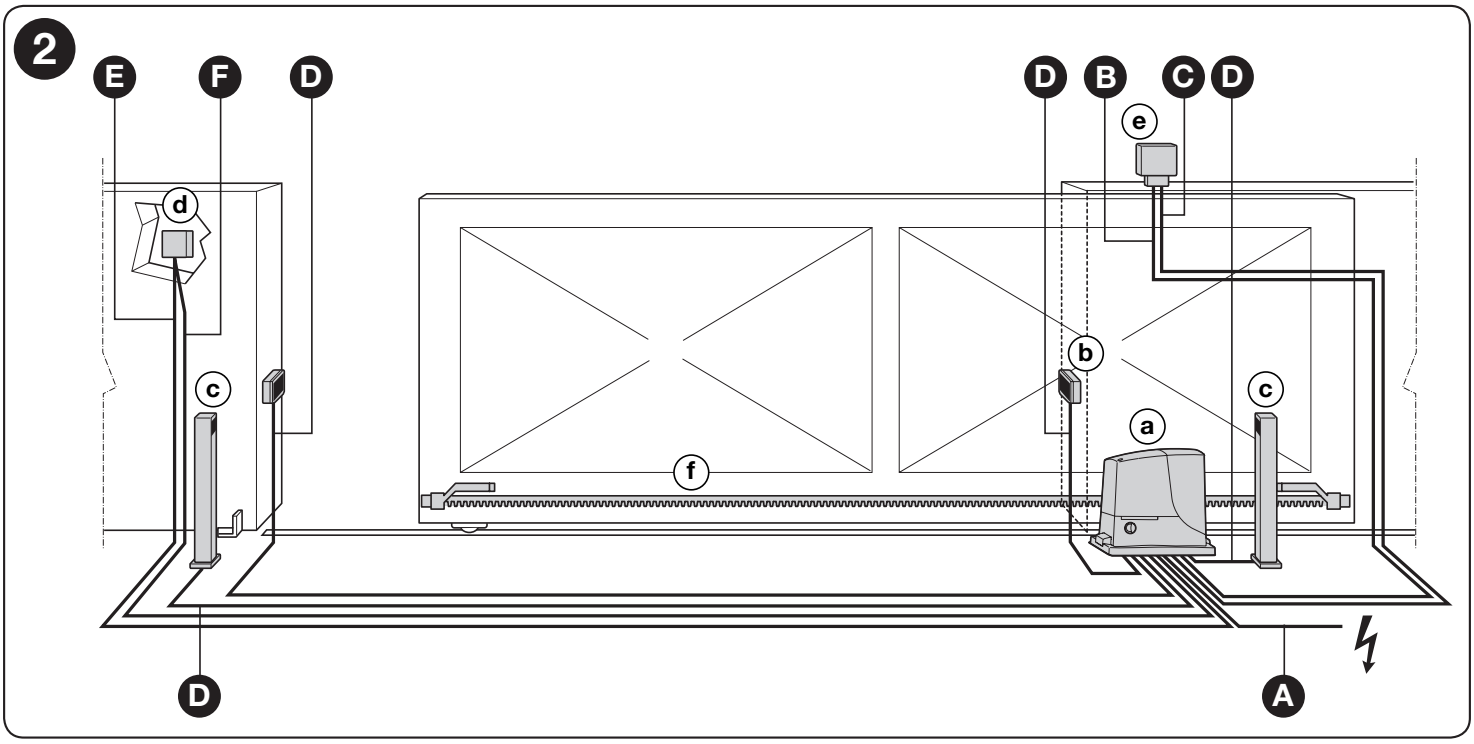

Before installing the system, check the gearmotor's clearance (fig. 3) and installation dimensions (fig. 4):

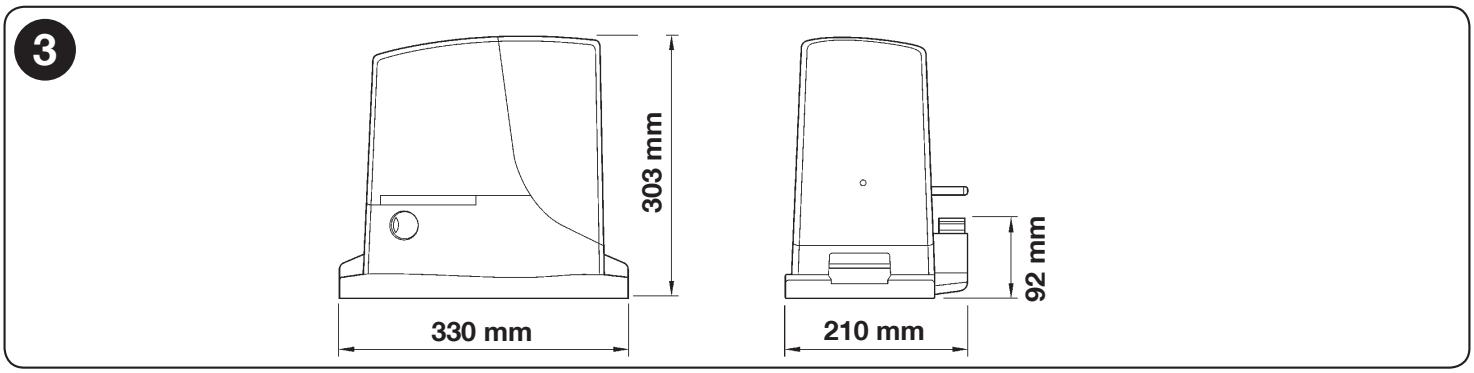

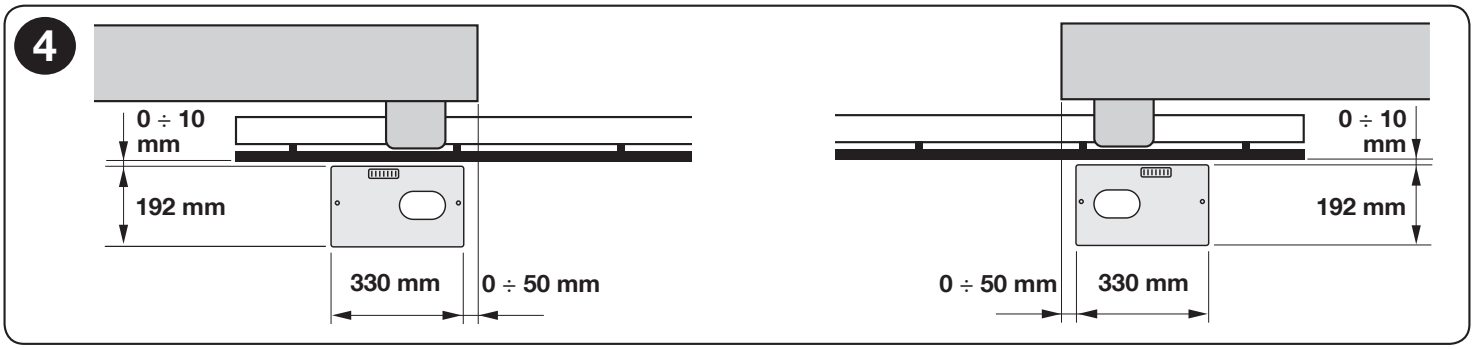

01. Dig the foundation and route the electric cable ducting

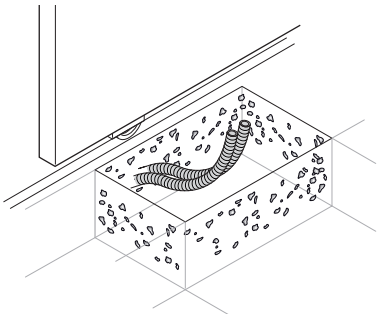

02. Secure the two anchors to the foundation plate with one nut above and one below.

⚠ **Tighten the lower nut in such a way that the thread protrudes by 25/35 mm.**

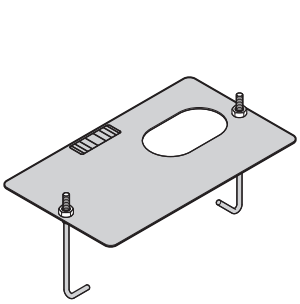

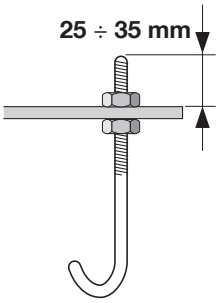

03. Now cast the concrete to secure the foundation plate.

⚠ **Before the concrete hardens, make sure the foundation plate is perfectly level and parallel to the gate.**

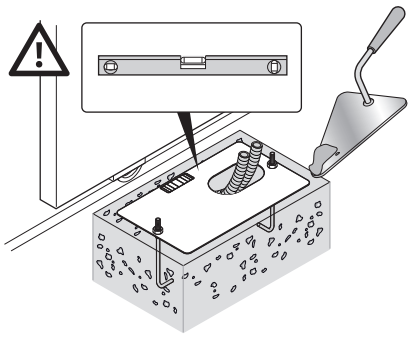

04. Allow the concrete to harden.

05. Secure the gearmotor:

a - Remove the top anchor nuts

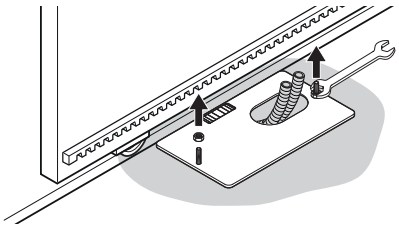

b - rest the gearmotor on the anchor dowels: make sure that it is parallel with the gate section

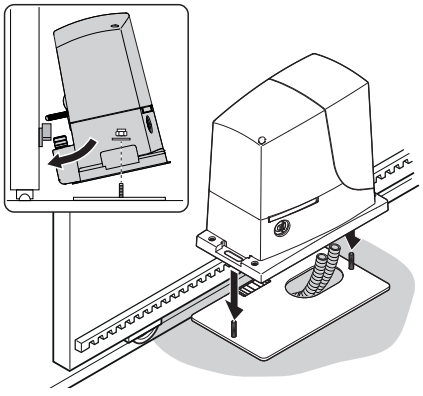

c - fit the provided washers and nuts and hand tighten them

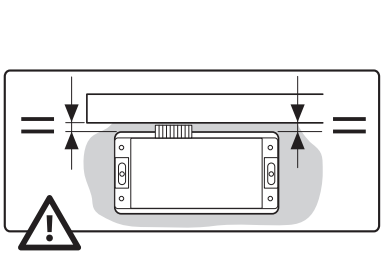

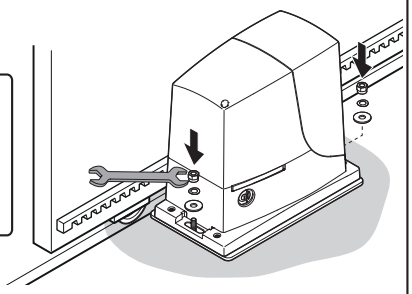

d - screw down the adjuster screws so that the gearmotor is at the proper height, leaving a gap of 1-2 mm between the pinion and the rack (this is to prevent the gate loading the gearmotor shaft)

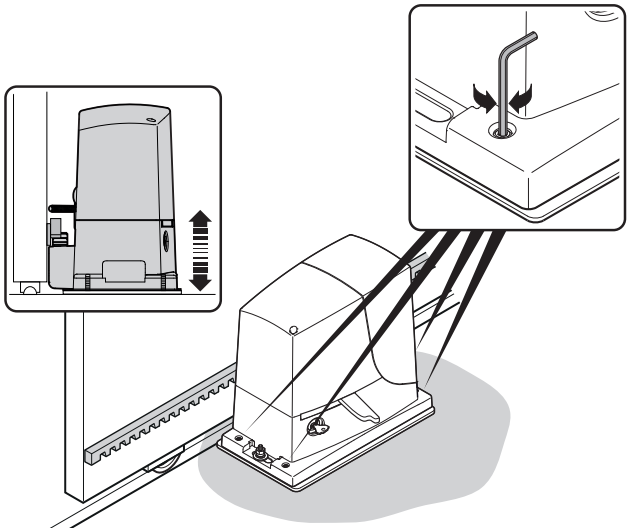

e / f / g - release the gearmotor

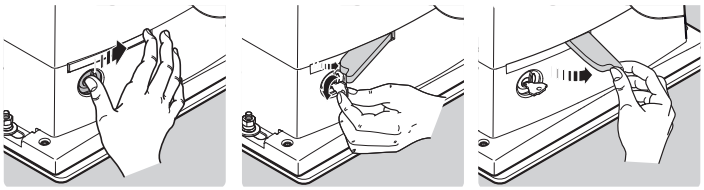

h - open the gate fully by hand

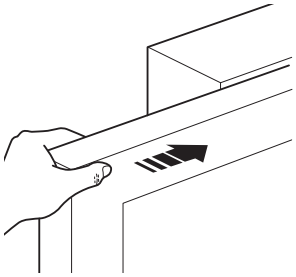

i - rest the first section of rack on the gearmotor's pinion: make sure that it corresponds to the start of the gate section and that there is a gap of 1-2 mm between the rack and the pinion itself (this is to prevent the gate loading the gearmotor shaft

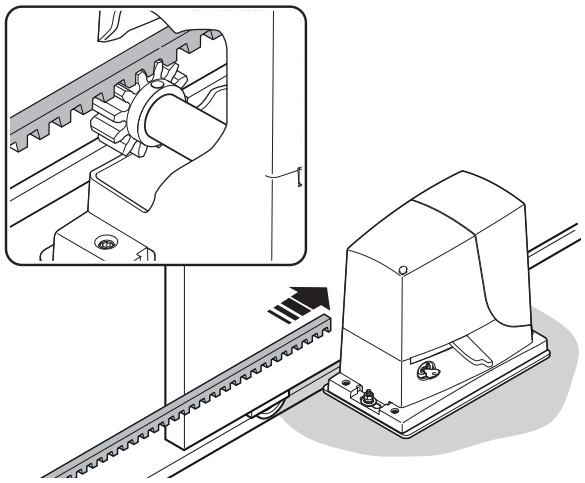

l - secure the rack section

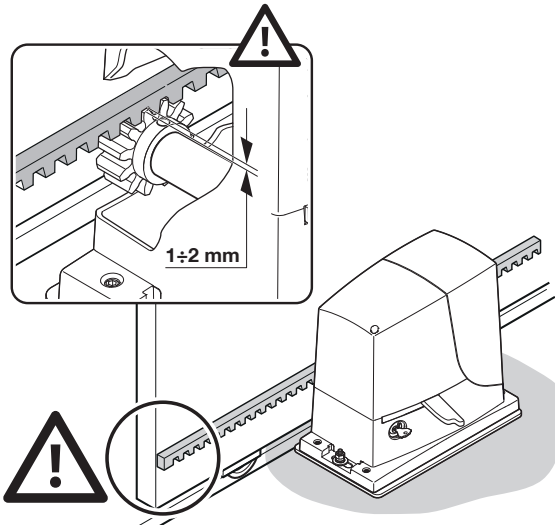

m - slide the gate by hand and, using the pinion as a reference, install the other sections of rack

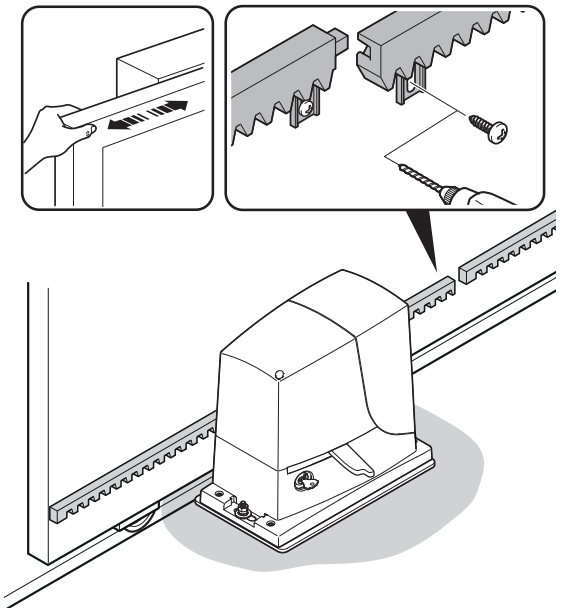

n - cut any excess rack off the end

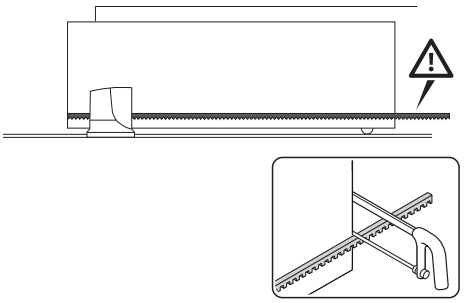

06. Slide the gate open and closed by hand to check that the rack is properly aligned with the pinion.

N.B.: make sure that there is a gap of 1-2 mm between the rack and pinion for the entire length of the gate

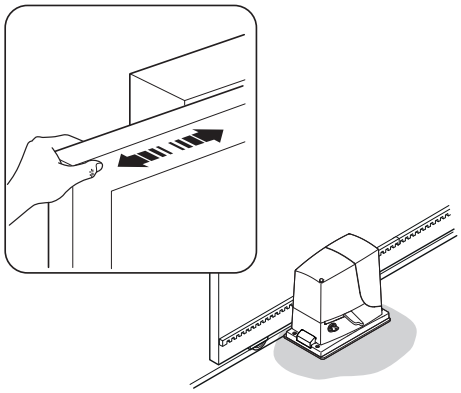

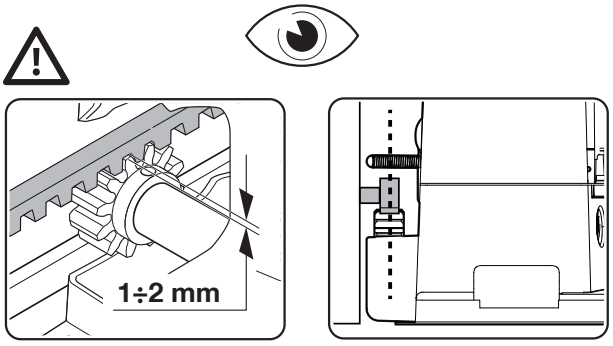

07. Tighten the nuts securing the gearmotor to the foundation plate fully down and cover the nuts with their caps

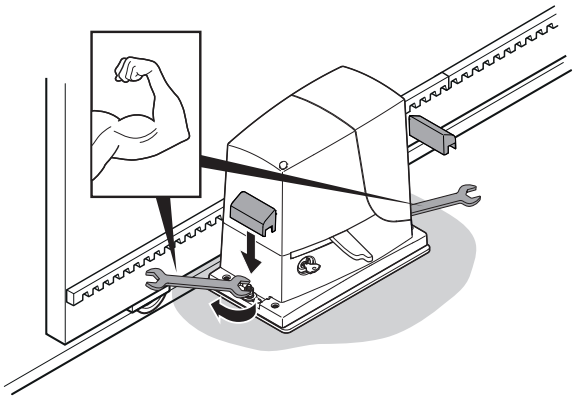

08. Install the OPEN and CLOSE limit switch brackets: proceed in the same way for each limit switch

OPEN:

a - slide the gate open by hand, stopping it 2/3 cm before the mechanical stop

b - slide the limit switch bracket along the rack in the open direction until the limit switch trips (you will hear it click)

c - after you hear the 'click', move the bracket further forwards by 2 cm (minimum)

d - secure the bracket to the rack with the provided grub screws

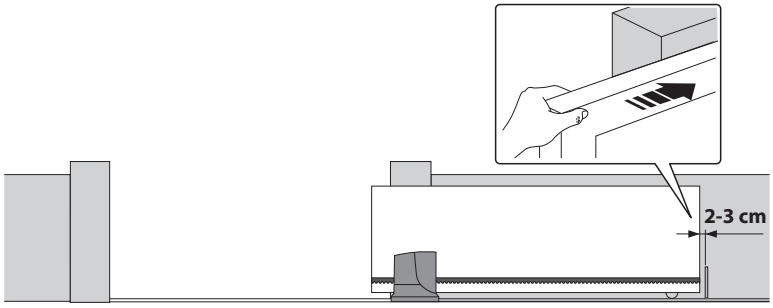

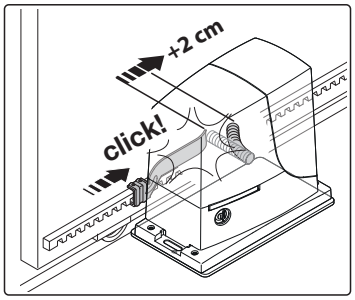

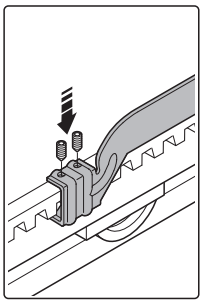

CLOSE:

a - slide the gate closed by hand, stopping it 2/3 cm before the mechanical stop

b - slide the limit switch bracket along the rack in the close direction until the limit switch trips (you will hear it click)

c - after you hear the 'click', move the bracket further forwards by 2 cm (minimum)

d - secure the bracket to the rack with the provided grub screws

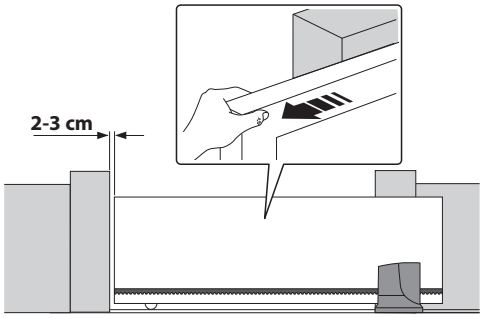

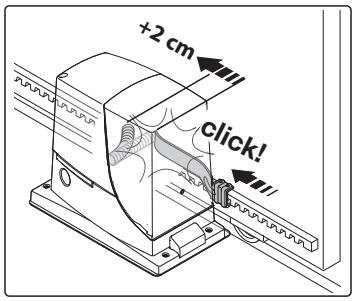

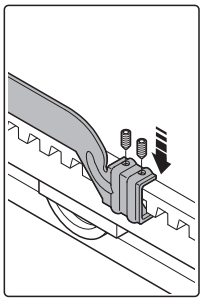

09. Manually lock the gearmotor

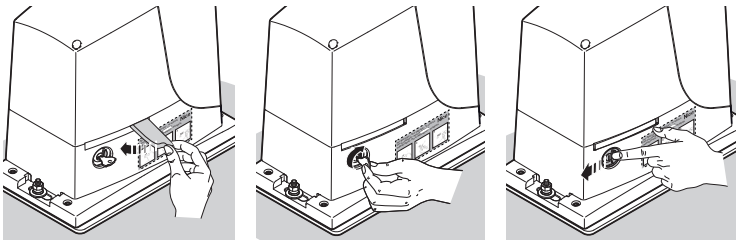

10. Apply the adhesive label with the unlocking instructions

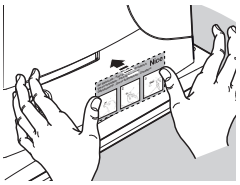

To install the devices provided in the system, refer to the respective instruction manuals..

⚠ **IMPORTANT! – The gearmotor is set up (at the factory) for installation on the right (fig. 5); if it must be installed on the left, proceed as shown in fig. 6 (a - b).**

5

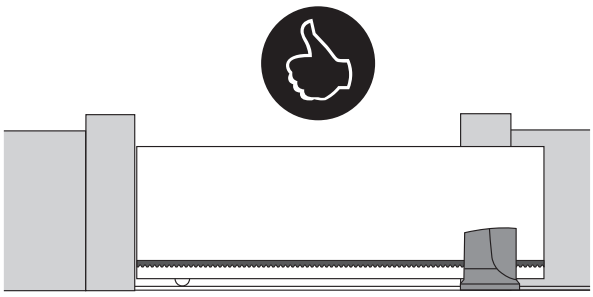

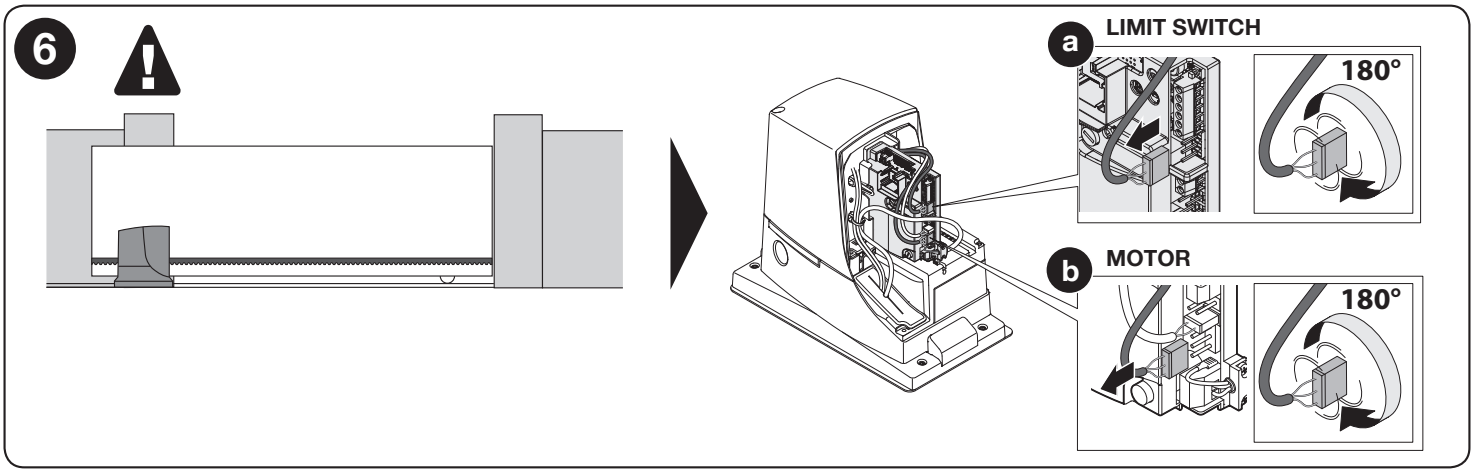

4 ELECTRICAL CONNECTIONS

⚠ CAUTION! - All electrical connections must be carried out with the system disconnected from the mains. Incorrect connections can cause damages to the equipment and injuries to people.

Fig. 2 shows the hookup of a typical installation; fig. 7 shows the connections to be made on the control unit.

4.1 - Types of electrical cables

Table 3 - Types of electrical cable (see fig. 2)

	Connection	Type of cable	Maximum length
A	POWER	3 x 1.5 mm^2	30 m *
B **C**	FLASHER WITH AERIAL	1 cable: 2 x 1.5 mm^2 1 shielded RG58 cable	10 m 10 m (< 5 m recommended)
D	PHOTOCELLS	1 cable: 2 x 0.25 mm^2 (TX) 1 cable: 4 x 0.25 mm^2 (RX)	30 m 30 m
E - F	KEY SWITCH	1 cable: 2 x 0.5 mm^2 **	20 m

* A power supply cable longer than 30 m may be used provided it has a larger gauge, e.g. 3 x 2.5 mm^2, and that a safety grounding system is provided near the automation unit.
** The two 2 x 0.5 mm^2 cables can be replaced by a single 4 x 0.5 mm^2 cable.

4.2 - Electrical cable connections: fig. 7

Table 4 - Description of electrical connections

Terminals	Function	Description
9 - 10	Stop	- input for devices that lock or stop the current operation; with appropriate precautions, “Normally Closed” or “Normally Open” contacts or constant resistance devices can be connected to the input. Other information on STOP can be found in paragraph 8.1.1 - STOP input
9 - 11	Photo	- input for safety devices which when tripped reverse the gate's direction of movement: NC (Normally Closed) contacts may be used - for further details, refer to par. 8.1.2 Photocells.
8 - 12	Phototest	Every time a manoeuvre is started, the operation of the photocells is checked; the manoeuvre starts if the test is positive. This is possible using a particular type of connections: the transmitters of the “TX” photocells are powered separately than the “RX” receivers. For further details, see paragraph 8.1.2 Photocells.
9 - 13	Step-by-step	input for devices which control movement. NO (Normally Open) contacts can be connected
4 - 5	Flashing light	- flasher output (auto-intermittent) - when active, the output supplies 230 V~ (120V~ on V1 / motor version)
1 - 2	Aerial	- radio receiver aerial input - aerial integrated into flasher; an external aerial can be used if desired

To make the electrical hookup, proceed as described below with reference to fig. 7:

01.	Open the cover: undo the screw and raise the cover
02.	Run the power cable through the hole (leave 20/30 cm of free cable) and connect it to its terminal clamp
03.	Run the cables of the equipment to be installed or already present through the provided hole (leave 20/30 cm of free cable) and connect them to their terminal clamps (see fig. 14)
04.	Perform the desired programming: chapter 7

7

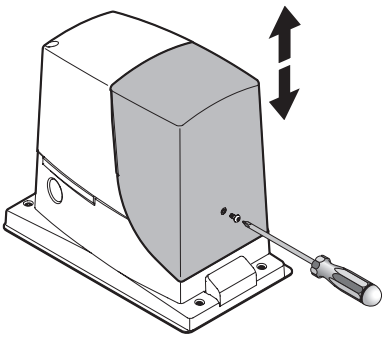

AERIAL	=	AERIAL	**LIMIT SWITCH**	=	LIMIT SWITCH
PROGRAM SWITCH	=	MICRO SWITCHES	**FLASH**	=	FLASH
RADIO LED	=	RADIO LED	**BOOST CAPACITOR**	=	BOOST CAPACITOR
LED PHOTO	=	LED PHOTO	**RUN CAPACITOR**	=	RUN CAPACITOR
LED SBS	=	LED SBS	**MOTOR**	=	MOTOR
OK LED	=	OK LED	**FUSE**	=	FUSE
SbS	=	STEP BY STEP KEY		=	RADIO KEY
PROGRAM	=	PROGRAMMING KEY			

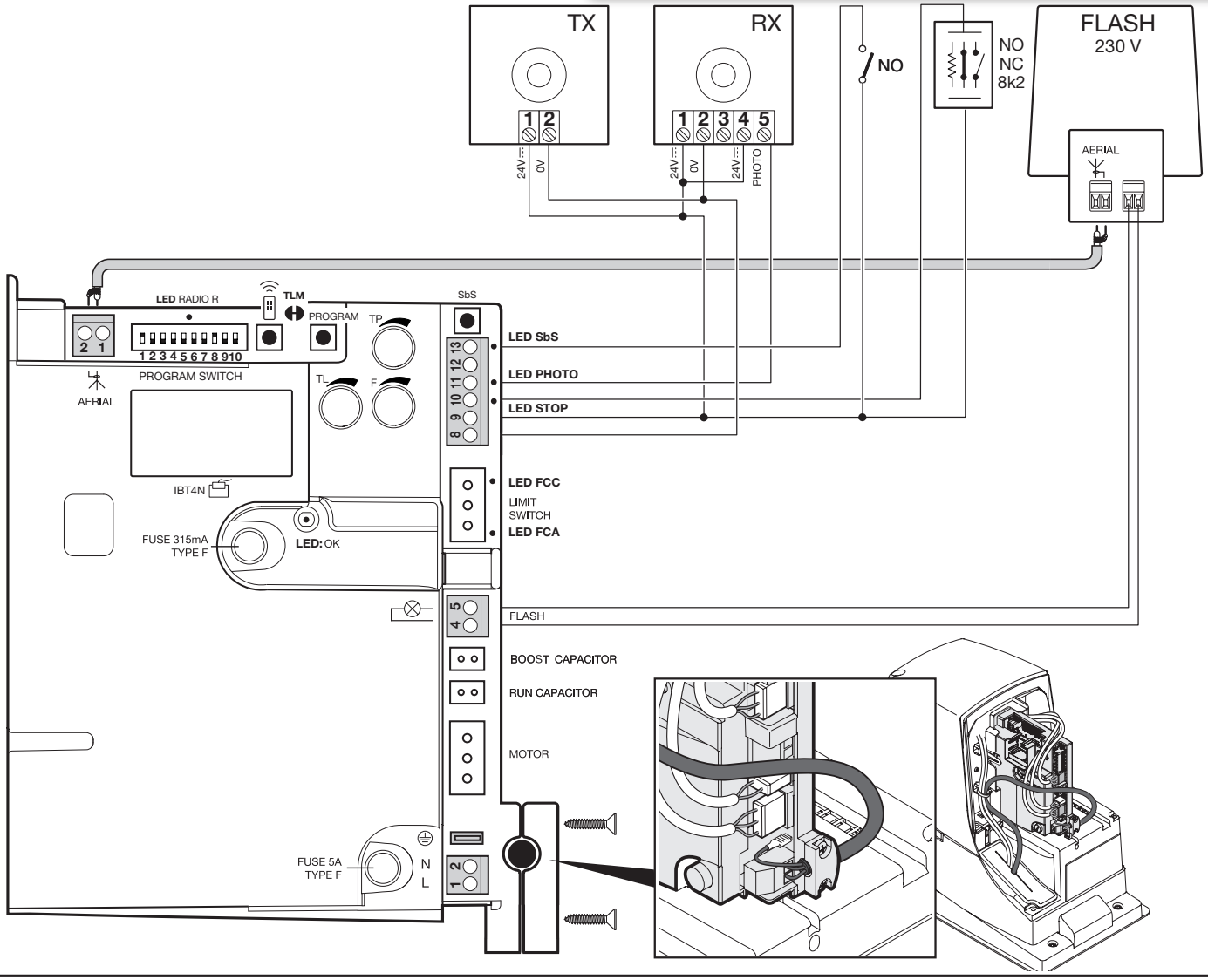

5 STARTING THE AUTOMATION AND CHECKING THE CONNECTIONS

5.1 - Hooking the automation up to the mains

⚠ CAUTION! – The automation must be hooked up to the mains by an expert electrician, in observance of established local regulations.

Proceed as follows

01.	Manually release the gearmotor so that the gate can be opened and closed 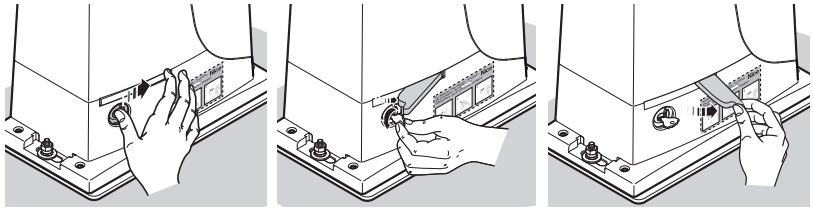
02.	Move the gate to the halfway position
03.	Manually lock the gearmotor 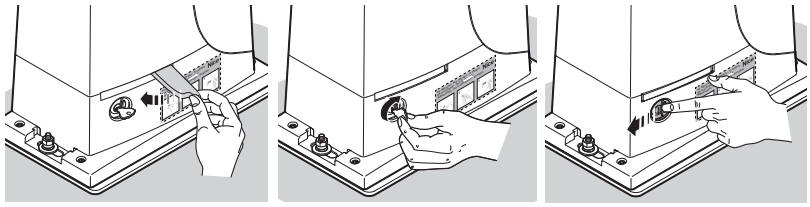
04.	Power the automation up and check: - that the OK led is flashing regularly: 1 flash per second - that the gate does not move and that the flasher is off 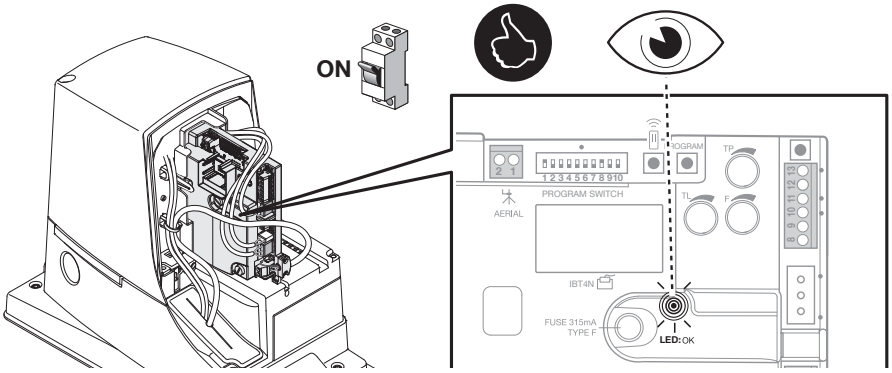
⚠	if any of these conditions are not satisfied, proceed as follows (step 05)
05.	Shut off mains power to the automation and check the electrical connections, photocell alignment, and fuses. If necessary, check the connections of the two limit switches: move the limit switch levers and check that the switch trips and turns off the FCA / FCC led on the control unit respectively

5.2 - Learning the devices

Once the power is connected, the control unit must recognize the devices connected on the STOP input and the configuration of the PHOTO input.

Table 7

1	Press the PROGRAM key and do not release it	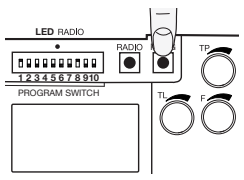
2	After 3 seconds, the device recognition procedure starts; the OK LED starts flashing quicker, keep pressing the PROGRAM key	
3	Wait a few seconds for the control unit to finish recognising the devices	
4	At the end, the STOP LED must be lit and the OK LED must be uninterruptedly on with a green light	
5	Release the PROGRAM key within 10 seconds	
6	At this point the OK LED flashes green 3 times confirming the recognition is complete	
7	If the recognition phase is not successful, the OK LED flashes red 5 times	

Learning the connected devices can be repeated at any time, even after installation, for example if a device is added; to carry out the new learning procedure, see section 8.1 "Adding or removing devices".

Once the device recognising procedure has been completed, check the PHOTO and STOP leds are lit; if this is not the case, proceed as per point 05 of paragraph 5.1 - Hooking the automation up to the mains. Once the operations have been completed, close the cover with its bolt.

6 TESTING AND COMMISSIONING

These are the most important phases in automating the gate and ensuring maximum system safety.
They must be carried out by qualified and expert personnel that must decide on the tests required to verify the solutions adopted with regard to the risks present and the compliance with laws, directives and regulations; in particular, all the requirements of the EN 13241-1, EN 12445 and EN 12453 standards.
The additional devices must undergo a specific test with regard to both their functions and interaction with ROX: please refer to the instruction manuals of the individual devices.

6.1 - Testing

The testing procedure can also be performed as a periodic check of the automation devices. Each component of the system (sensitive edges, photocells, emergency stop, etc.) requires a specific testing phase. To do so, follow the procedures given in the instruction manuals.
Run the test as follows:

01.	Ensure that all specifications in chapter 1 “WARNINGS” have been observed in full
02.	Check that the gate can be moved by hand in both directions with a force no greater than the value given in the application limits (Table 1) 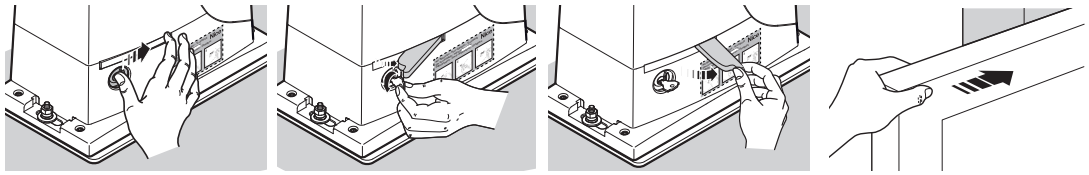
03.	Lock the gearmotor 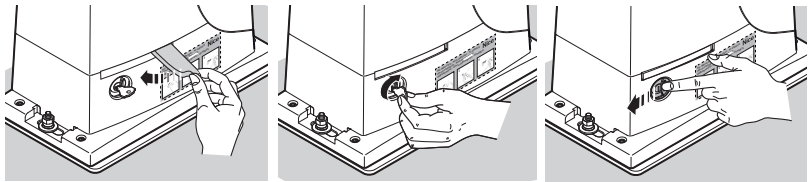
04.	Using the key switch, control key or radio transmitter, test the opening and closing of the gate and make sure that it moves in the intended direction
05.	The test should be carried out a number of times to make sure that the gate moves smoothly, that there are no points of excessive friction and that there are no defects in the assembly or adjustments
06.	Check the operation of the safety equipment, one by one (photocells, sensitive edges, etc.)
07.	Check the operation of the photocells and any interference with other equipment: 1 - pass a dia. 5 cm length 30 cm cylinder along the optical axis, first close to the TX, then close to the RX 2 - check that the photocells trip in any condition, switching from active to alarm and back 3 - check that tripping the photocell results in the intended response of the control unit: e.g., when tripped during a closing stroke, the gate changes direction
08.	If the dangerous situations caused by the movement of the door have been safeguarded by limiting the force impact, the user must measure the impact force according to the EN 12445 standard. If the adjustment of the “force” is used to assist the system for the reduction of the impact force, try to find the adjustment that gives the best results.

6.2 - Commissioning

Commissioning can take place only after all testing phases have been terminated successfully (par. 6.1).
Partial or “makeshift” commissioning is strictly prohibited.

01.	Create and store (for minimum 10 years) the technical dossier of the automation that must include: overall design of the automation, diagram of the electrical connections, risk assessment and relative solutions adopted, declaration of conformity of the manufacturer of all the devices used (for ROX use the attached CE Declaration of conformity); copy of the user instruction manual and the automation maintenance plan
02.	Using the key switch or radio transmitter, test the opening and closing of the gate and make sure that it moves in the intended direction
03.	Prepare the declaration of conformity of the automation system and deliver it to the owner.
04.	Give the owner the user manual (tearout insert)
05.	Prepare and give the owner the maintenance schedule
06.	Prepare and give the owner the maintenance schedule
07.	The force adjustment is an important safety aspect and must be done with care by an expert technician. **Important!** - Adjust the force to enable the gate to move as intended; higher forces than this can cause injury to animals and persons or damage to property if the gate collides with an obstacle
08.	Before commissioning the gate, inform the owner in writing about the attendant residual risks.

7 PROGRAMMING

In this manual the programming procedures are explained with the use of icons and their meanings are given in the following glossary:

GLOSSARY			
Symbol	**Description**	**Symbol**	**Description**
	led on		wait ...
	led off		observe / check
	led flashing	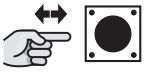	press and release the key
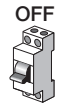	shut off mains power	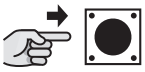	hold down the key
	turn on mains power	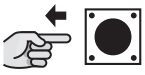	release the key
	press and release the desired key on the radio transmitter to be memorized	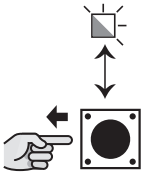	release the key exactly when the led behaves in the specified manner (on, flashing, off)
	hold down the desired key on the radio transmitter to be memorized		correct procedure
	release the transmitter key		INCORRECT procedure

The control unit has a variety of factory settings which can be reprogrammed: this chapter describes the available functions and how to program them. Check also chapter 8 “Detailed information”.

The control unit is equipped with microswitches, trimmers and the keys described below.

Name	Symbol	Description
PROGRAM SWITCH		Activates a function
Trimmer **TL**		Sets the ‘Operating Time’ parameters (see paragraph 7.1.1)
Trimmer **TP**		Sets the ‘Pause Time’ parameters (see paragraph 7.1.1)
Trimmer **F**		Sets the ‘Force’ parameters (see paragraph 7.1.1)
RADIO key		Programs the radio receiver
PROGRAM key		Use for device programming

Factory settings (default)		
Micro switches: **Semiautomatic (1 = ON)** 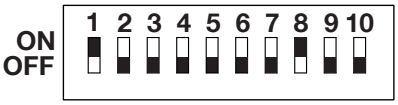		
Trimmer TL (Operating Time) 	**Trimmer TP (Pause Time)** 	**Trimmer F (Force)** 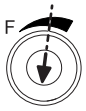
⚠ **CAUTION! - Every time the selection of micro switches 1 and 2 is changed, it is necessary to repeat the device learning procedure as described in paragraph 5.2.**		

7.1 - Adjustable parameters: Trimmer (TL - TP - F)

The control unit's parameters can be adjusted with three trimmers (fig. 7)

TL (Operating Time)		
Operating mode	**Adjustment**	
sets the maximum duration of an Open or Close movement	**01.**	select 'Semiautomatic' or 'Automatic' and set micro switch 1 to 'ON'
	02.	set trimmer TL to the mid position
	03.	run a full Open and Close cycle: check that the maximum duration setting (Open / Close) is high enough and that a margin of 2 or 3 seconds remains. Adjust trimmer TL to its maximum setting if necessary. N.B.: if this time is not sufficient, cut the TLM jumper next to trimmer TL (fig. 7) to obtain a 'Long Operating Time' (TLM)
Slowing down function: to use this function, activate the "slow down" programmable function and set trimmer TL so that the slow down phase starts 50/70 cm before the gate trips the limit switch. N.B.: the result of an adjustment to this parameter is visible during the first Open movement run after the modification has been made.		
TP (Pause Time)		
Operating mode	**Adjustment**	
sets the time between the end of an Open movement and the start of the next Close movement	**01.**	select 'Automatic' and set micro switch 2 to 'ON'
	02.	set trimmer TP to the desired value;
	03.	to check the time setting, run a full Open movements and see how long it takes before the Close movement starts.
F (Force)		
⚠**CAUTION! – Adjustments to this parameter are safety critical: take great care when making this adjustment.**		
To adjust the parameter, try various settings: you must measure the force applied by the gate when moving and compare it with local regulations.		

7.2 - Programmable functions

The control unit has a set of micro switches (PROGRAM SWITCH - fig. 7) which activate functions to adapt the automation to the user's needs as well as making it safer to use.
The micro switches select the operating modes and program the functions, as described in Table 5.

To activate/deactivate a function:

Micro switches (1 ... 10)	ACTIVATE	DEACTIVATE
	ON	OFF
IMPORTANT! - some functions are safety critical; make sure to check which function is safest.		

Table 5 - Programmable functions	
Switches 1-2	**Operation**
Off-Off	Manual (hold-to-run)
On-Off	Semiautomatic
Off-On	Automatic (automatic closing)
On-On	Automatic + Always Closes
Switch 3	**Operation**
On	Condominium (not available in manual mode)
Switch 4	**Operation**
On	Pre-flashing
Switch 5	**Operation**
On	Closes 5 seconds after 'Photo' if set to 'Automatic' or 'Close after Photo' if set to 'Semiautomatic'
Switch 6	**Operation**
On	Safety "Photo" also when Opening
Switch 7	**Operation**
On	Gradual Start-up
Switch 8	**Operation**
On	Slow down
Switch 9	**Operation**
On	Brake mode
Switch 10	**Operation**
Off	Brake mode

Switches 1-2:	
Manual operation	the movement is only executed while the control is active (transmitter key held to run).
Semiautomatic operation	sending a command executes the entire movement until the operating time expires or the gate trips the limit switch.
Automatic operation	after an Open, the system pauses and then automatically Closes the gate.
Always closes operation	follows a power failure: if, when power is restored, the control unit determines that the gate is open, it automatically flashes the flasher for five seconds and then runs a Close cycle.
Switch 3:	
Condominium operation	when a "Step-by-Step" command is sent and the gate starts to Open, it cannot be stopped by any other "Step-by-Step" or Open command sent by radio until it has completed. When closing, on the other hand, sending a new Step-by-Step command will stop and reverse the movement.

Switch 4:

When a command is sent, the flasher starts flashing and, after 5 seconds (2 seconds in Manual mode), the movement starts.

Switch 5:

This function, when set in Automatic mode, holds the gate open only for the time required for vehicles or pedestrians to pass through it; when the Photo device is cleared, the movement stops and a Close movement starts after a 5 second delay.
If the functions is set in Semiautomatic mode, when the photocells are tripped while the gate is closing, automatic Close is activated with the programmed Pause Time.

Switch 6:

The Photo function is usually active only during Close movements; if micro switch 6 is set to "ON", tripping the photocell interrupts Open movements too. On the other hand, in Semiautomatic or Automatic modes, the Open movement starts again as soon as the photocell clears.

Switch 7

This function activates a soft start to gate movements to prevent them moving jerkily.

Switch 8:

Slow down, which reduces the speed to 30% of its nominal value, reduces the impact force of the gate at the end of a movement.
When this function is active, you must adjust the operating Time (TL) since the start of the slow down phase is linked to this setting. Set the TL so that the slow down starts 50-70 cm before the limit switch is tripped. The slow down function not only reduces the speed of the gate but also the torque exerted by the motor (by 70%). **CAUTION** – In automations which demand a high motor torque, setting this function can stop the motor.

Switches 9 - 10:

Setting a combination of switches 9 and 10, the motor brake procedure is carried out; according to the combination, the intensity of the braking power is established on the basis of the following setup:

Table 6		
dip9 off	dip10 off	braking off
dip9 off	dip10 on	light braking
dip9 on	dip10 off	medium braking
dip9 on	dip10 on	intense braking

7.3 - Integrated radio receiver

For remote control operation, the control unit has an integral 433.92 MHz radio receiver compatible with FLO, FLOR, O-CODE, and HCS SMILO coding.

7.3.1 - Memorisation of radio transmitters

Each radio transmitter is recognised by the radio receiver by means of a "code" which is different from that of any other transmitter. There are two types of memorisation: Mode 1 and Mode 2.

• Mode 1:

automatically assigns the commands indicated in table 8 to the transmitter's keys.

Each transmitter is memorised in a single step, with all keys programmed: it does not matter which key is pressed. (One memory location is occupied for each key).

N.B.: when memorised in Mode 1, a transmitter can control only one automation.

Table 8	
Transmitter key	**Command**
1	Step-by-step
2	Pedestrian opening
3	Open
4	Close
N.B.: single-channel transmitters have only key 1; two-channel transmitters have keys 1 and 2	

Mode 1 memorisation

01.	02.	03.	04.
x **4s**	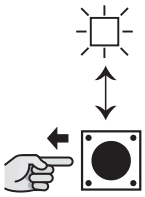	within 10s x **3s**	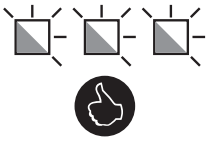
RADIO KEY	RADIO KEY AND LED	TRANSMITTER DESIRED BUTTON	RADIO LED

• Mode 2:
freely assigns a command among those listed in table 9.

For each phase, only one key is memorised (the one pressed during memorisation).
(One memory location is occupied for each key).

Table 9	
Transmitter key	**Command**
1	Step-by-step
2	Pedestrian opening
3	Open
4	Close
5	Stop

Mode 2 memorisation

	01.	02.	03.	04.
Step-by-step	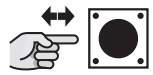 x **1**		within 10s x **3s**	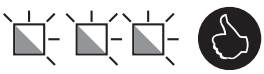
Pedestrian opening	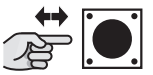 x **2**		within 10s x **3s**	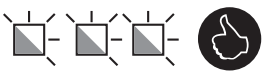
Open	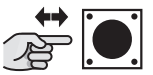 x **3**	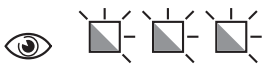	within 10s x **3s**	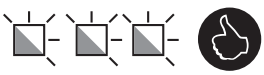
Close	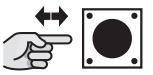 x **4**	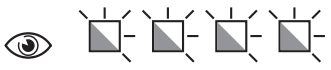	within 10s x **3s**	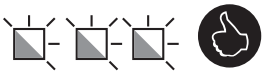
	RADIO KEY	RADIO LED	TRANSMITTER DESIRED BUTTON	RADIO LED
N.B.: if you wish to memorise other transmitters, repeat step 03 within 10 sec. The memorisation procedure terminates after 10 sec if no other operations are run				

7.3.2 - “Remote” memorisation

You can memorise a new transmitter without having to operate the receiver key (10-20 m from the receiver).

You must have a previously memorised transmitter (old). The new transmitter will be memorised with the same characteristics as the old one.

⚠ Important! Remote memorisation may be done on all receivers within the range of the transmitter; therefore, only the one involved in the operation should be kept switched on.

Standard procedure

⚠ During the procedure, if the old transmitter was memorised in:

- Mode 1 → press any key
- Mode 2 → press the key you wish to memorise

01.	With the motor stopped, stand close to the control unit	
02.	**NEW** transmitter	* x **5s**
03.	**OLD** previously memorised transmitter	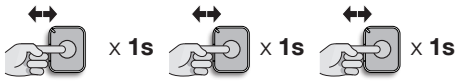 x **1s** x **1s** x **1s**
04.	**NEW** transmitter	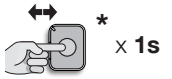 * x **1s**

If the procedure terminated successfully the new transmitter is memorised

*** same key as NEW transmitter**

Alternative procedure

⚠ During the procedure, if the old transmitter was memorised in:

- Mode 1 → press any key
- Mode 2 → press the key you wish to memorise

01.	With the motor stopped, stand close to the control unit	
02.	**NEW** transmitter	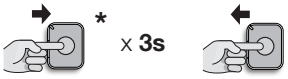 * x **3s**
03.	**OLD** previously memorised transmitter	** x **3s**
04.	**NEW** transmitter	* x **3s**
05.	**OLD** previously memorised transmitter	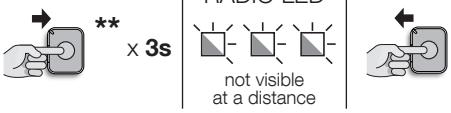 ** x **3s** not visible at a distance

If the procedure terminated successfully the new transmitter is memorised

*** same key as NEW transmitter**

**** same key as OLD transmitter**

⚠ The RADIO LED can also perform the following:

1 rapid flash if the transmitter is already stored, 6 flashes if the transmitter's radio coding is not compatible with that of the control panel receiver or 8 flashes if the memory is full.

7.3.3 - Deleting radio transmitters

⚠ This procedure can be carried out ONLY if the radio memory is unlocked.

Table 10 Transmitter deleting procedure		
1	Hold down the RADIO key on the control unit until step 02	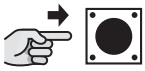
2	Wait for the radio led R to come on, then wait for it to go off and finally wait for 3 flashes	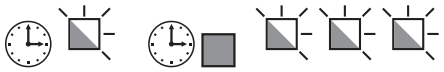
3	Release the key during the 3rd flashing	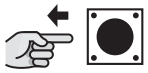
⚠	If the memorisation has been successful, the radio led R on the control unit flashes 5 times	

7.3.4 - Locking / Unlocking the radio memory

⚠This procedure locks the memory, preventing acquiring and deleting radio transmitters.

Table 11 **Locking / Unlocking the radio memory**		= RADIO key = RADIO led
1	Switch the power supply to the control unit off	
2	Hold down the RADIO key on the control unit (until step 04)	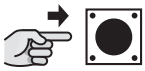
3	Switch the power back on (continue holding the key down)	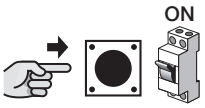
4	After 5 seconds, the radio led R flashes slowly twice; release the key	
5	Repeatedly press and release the radio key on the control unit (within 5 seconds), to select one of the following options: - led off = Deactivation of the memorisation lock. - led on = Activation of the memorisation lock.	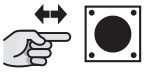
⚠	5 seconds after pressing the radio key for the last time , the radio led R flashes slowly twice to mark the end of the procedure.	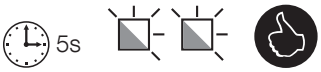

8 FURTHER DETAILS

8.1 - Adding or removing devices

Automation devices can be added or removed at any time; in particular at the STOP input, various types of devices can be connected as described in the following paragraphs; ⚠ WARNING! - at the end of the modifications made to the configuration of the alt input and of the photocell input it is necessary to repeat the device learning procedure as described in paragraph 5.2.

8.1.1 STOP input

Input that stops movement immediately, followed by a brief reverse of the manoeuvre.
Devices with NO (normally open), NC (normally closed) contact output or with output with 8.2kΩ constant resistance, for instance sensitive edges, can be connected to this input. The control unit recognizes the type of device connected to the STOP input while acquiring the devices (paragraph 7.3 Learning the devices).
In the presence of any change from the initial recognition, the automation stops and reverses its direction briefly.
With appropriate precautions, it is possible to connect more than one device, even of different type, to the STOP input:
- Numerous NO devices can be connected in parallel between themselves without any limit in quantity.
- Numerous NC devices can be connected in series between themselves without any limit in quantity.
- Numerous 8.2kΩ constant resistance devices can be connected “in cascade” with just one 8.2kΩ terminating resistor
- The combination of NO and NC is possible putting the 2 contacts in parallel with the warning of putting an 8.2kΩ resistor in series with the NC contact (this makes the combination of 3 devices also possible: NO, NC and 8.2kΩ).

⚠ If the STOP input is used to connect devices with safety functions, only the devices with 8.2kΩ constant resistance output guarantee category III safety against faults in compliance with the EN 13849-1 standard.

8.1.2 Photocells

To add a pair of photocells, proceed as follows:
01. Power up the receivers (RX) via terminals 8 - 9 (see drawing 7)
On the other hand, the connection method of the transmitters depends on whether we want photocells to operate with the phototest mode active.
Phototest is a function in the control unit that increases the reliability of the safety devices, allowing reaching “category II” in compliance with the EN 13489-1 standard, with regard to the control unit and safety photocell assembly.
When a manoeuvre is activated, the involved safety devices are checked and the manoeuvre starts only if everything is OK.
If the test is negative (photocell blinded by the sun, wires short circuited, etc.), the fault is detected and the manoeuvre is not carried out.
To add a pair of photocells, connect them as follows.

Connection without “Phototest” function:
Power the transmitters and receivers directly from the service output of the control unit (terminals 8 and 9).

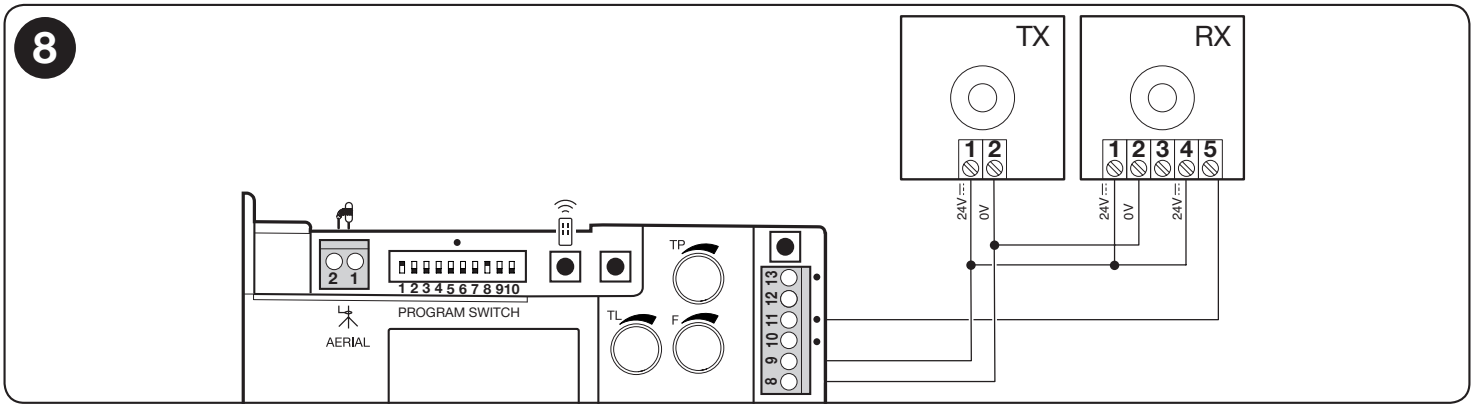

Connection with “Phototest” function:
Power the receivers directly from the service output of the control unit (terminals 8 and 9). Power for the photocell transmitters is not taken from the service output, but from the “Phototest” output between terminals 8 - 12. The maximum usable current on the “Phototest” output is 100mA.
⚠ To use the “Phototest” function, it is necessary to activate the “synchronisation” as described in the instruction manual of the photocells.

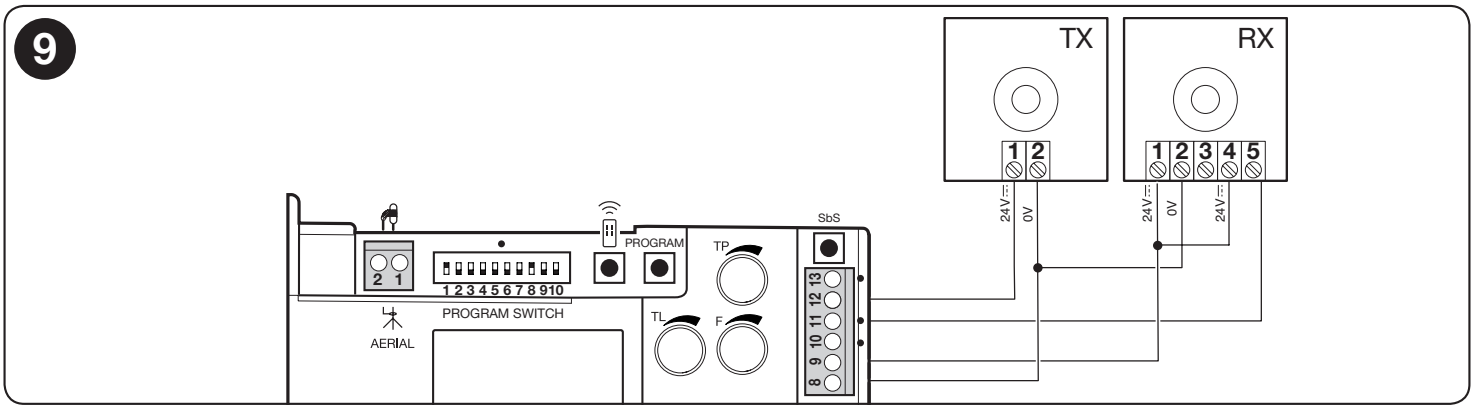

8.2 - Power for external devices

To power external devices (transponder badge reader, or backlighting for a keyswitch) connect the device to the control unit as shown in the figure.

The power supply voltage is 24V⎓ +/- 10% with a maximum available current of 100mA.

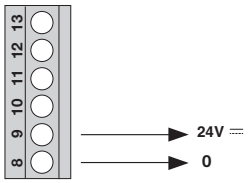

8.3 - Oview programmer connection

It is possible to connect the Oview programmer to the control unit via the IBT4N interface with a bus cable with 4 electrical wires inside. This unit allows the quick and complete programming of functions, adjustment of parameters, update of the control unit firmware, diagnosis to detect any malfunctions and periodic maintenance.

Oview allows operating the control unit from a maximum distance of 100 m. If more control units are connected among themselves in a 'BusT4' network, connecting Oview to one of these control units, it is possible to view all the control units connected in series (maximum 16 control units).

The Oview unit can remain connected to the control unit also during the automation normal operation, allowing the user to send the commands through a specific menu.

⚠ Caution! - Before connecting the IBT4N interface, disconnect the control unit from the mains.

10

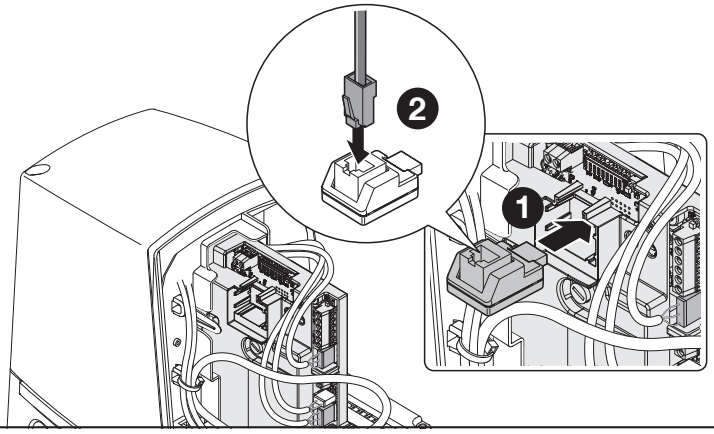

8.4 - Total deletion of the memory

When it is necessary to delete the memory completely and go back to the factory-set values, carry out the following procedure when the motor is switched off. ⚠ Caution! - The total deletion of the memory deletes the radio memory lock.

Table 12 **Procedure of total deletion of the memory**		● = PROGRAM key ☐ = led OK
1	Switch the power supply to the control unit off	
2	Hold down the PROGRAM key on the control unit (until step 05)	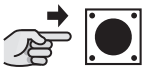
3	Switch the power back on (continue holding the key down)	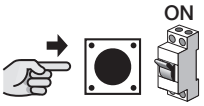
4	Wait for the OK led on the control unit to come on, then wait for it to go off and finally wait for 3 flashes	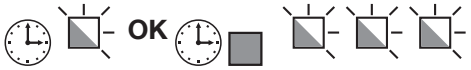
5	Release the key during the 3rd flashing	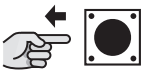
⚠	If the procedure has been successful, the OK led on the control unit flashes 5 times	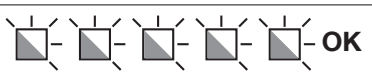
⚠	Important - This procedure does not delete the transmitters.	

8.5 - Special functions

"Always open" function

It is a property of the control unit that allows always commanding an opening manoeuvre when the step-by-step command lasts longer than 3 seconds; useful for instance to connect the contact of a programming clock to the SbS input to keep the gate open during a certain period of time. This property is not valid if manual operation is active (switches 1-2 off-off - programmable functions - Table 5).

“Move anyway” function

If some safety device is not working or is faulty, it is possible to control and move the gate anyway in “Hold-to-run” mode. For further details, please refer to the tearout insert “USER GUIDE” (final part of the manual).

9 DIAGNOSTICS

Some devices are display messages to identify their status and faults.

9.1 - Control unit signals

The leds on the control unit issue signals to indicate their normal/faulty operation.
Table 13 lists the signals:

Table 13

OK LED	Cause	Solution
Red and green leds OFF	Serious	Check if the power is on; check fuses have not been tripped: if that is the case, check the cause of the fault and replace with others of the same value.
Red or green led ON	Serious malfunction	Try and switch the control unit off for a few seconds; if the situation does not change, there is a fault and the electronic board must be replaced.
1 green flash a second	All OK	Normal operation of the control unit.
1 red flash 1 sec. pause 1 red flash	the installation of the devices was not successful or the configuration of the 1-2 dip switches was changed without re-learning the devices	Check the correct connection of the alt and photocell inputs (see figure 7 and paragraphs 8.1.1 and 8.1.2) or if the configuration of micro switches 1-2 has been changed, perform the device learning procedure (paragraph 5.2)
2 quick green flashes	There has been a change in the input status	This is normal when there is a change in one of the inputs: SbS, STOP, triggering of photocells or the radio transmitter is used.
2 red flashes 1 sec. pause 2 red flashes	Triggering of a photocell	At the beginning of the manoeuvre, one or more photocells are preventing movement: check to see if there are any obstacles. During the closing movement it is normal if an obstacle is really present.
4 red flashes 1 sec. pause 4 red flashes	Activation of the STOP input	At the start of the manoeuvre or during the movement, the STOP input has been triggered: check the cause.
5 red flashes 1 sec. pause 5 red flashes	Internal parameter memorisation error	Wait at least 30 seconds during which the control unit tries to reset. If the situation does not change, it is necessary to delete the memory and carry out the storing procedure again
7 red flashes 1 sec. pause 7 red flashes	- Error in the internal circuits. - configuration of programming switches 1 and 2 changed	Disconnect all the power circuits for a few seconds, then try again and send a command; if the situation does not change there may be a serious fault on the board or on the motor wiring: check and replace as required. If the configuration of switches 1 and 2 has been modified, repeat the device learning procedure or reset the previous configuration
8 red flashes 1 sec. pause 8 red flashes	Command already present.	Another command is already present. Remove the command to be able to send more.
PHOTO led	**Cause**	**Solution**
Off	Photocell input activated	At the start of the manoeuvre, one or more photocells are preventing movement; check to see if there are any obstacles, also check the NC connection for faults.
On	All OK	The photocell is aligned and the movement is permitted
STOP led	**Cause**	**Solution**
Off	Activation of the STOP input	Check the devices connected to the STOP input
On	All OK	STOP Input active
SbS led	**Cause**	**Solution**
Off	Step-by-step command not present	
On	Step-by-step command present	
FCA led	**Cause**	**Solution**
Off	FCA limit switch input triggered	
On	FCA limit switch input closed	
FCC led	**Cause**	**Solution**
Off	FCC limit switch input triggered	
On	FCC limit switch input closed	
RADIO led R	**Cause**	**Solution**
Off	During normal operation, it shows a radio code that is not in the memory has been received.	
On	Radio transmitter programming or deletion in progress	

10 WHAT TO DO IF...

In case of malfunction due to problems during installation of failure of parts, refer to table 13:

Table 14

Problem	Solution
The radio transmitter does not control the gate and the led on the transmitter does not light up	Check to see if the transmitter batteries are exhausted, if necessary replace them
The radio transmitter does not control the gate but the led on the transmitter lights up	Check to see if the transmitter has been memorised correctly in the radio receiver. Check that the emission of the transmitter radio signal is correct by means of this empirical test: push a key and rest the LED on the aerial of a normal radio (ideally an economical one) that is switched on and tuned in, as close as possible, to 108.5Mhz FM; a slight crackling sound should be heard
No manoeuvre starts and the OK LED fails to flash.	Check that the product is being supplied 230 V mains power Check to see if fuses F1 and F2 (fig. 7) have blown; if necessary, identify the reason for the failure and then replace the fuses with others that have the same current rating and specs
No manoeuvre starts and the flasher is off	Check that the command is actually received: if the command reaches the Step-by-Step input, the OK led flashes twice to indicate that the command has been received

11 DISPOSAL OF THE PRODUCT

This product constitutes an integral part of the automation system, therefore it must be disposed of together with the former.
As in installation, also at the end of product lifetime, the disassembly and scrapping operations must be performed by qualified personnel.
This product is made up of different types of material, some of which can be recycled while others must be disposed of. Seek information on the recycling and disposal systems envisaged by the local regulations in your area for this product category.

⚠ CAUTION! – Some parts of the product may contain polluting or hazardous substances which, if disposed of into the environment, constitute serious environmental and health risks.

As indicated by the symbol, the product must not be disposed of as domestic waste. Sort the materials for disposal, according to the methods envisaged by current legislation in your area, or return the product to the retailer when purchasing an equivalent product.

⚠ CAUTION! - Local legislation may include the application of serious fines in the event of improper disposal of this product.

12 MAINTENANCE

To keep the system safe and ensure a long service life, it must be serviced regularly: at most every 6 months or after 20,000 movements since the last service.

⚠ CAUTION! – The maintenance operations must be performed in strict compliance with the safety directions provided in this manual and according to applicable legislation and standards.

01.		Check for any deterioration in automation system components, paying special attention to erosion or oxidation of the structural parts. Replace any parts which are below the required standard.
02.	Check the wear and tear on the moving parts: pinion, rack and the gate components; if necessary replace them	
03.		Run all the tests and checks indicated in par. 6.1 - Testing.

13 TECHNICAL SPECIFICATIONS

⚠ All technical specifications stated herein refer to an ambient temperature of 20° C (± 5° C). • Nice S.p.a. reserves the right to apply modifications to products at any time when deemed necessary, maintaining the same intended use and functionality.

	ROX600	ROX1000	ROX1000/V1
Type	Electromechanical gear motor for the automatic movement of sliding gates for residential use, complete with electronic control unit		
Pinion Z	15; Modulus: 4; Pitch: 12.5 mm; Primitive diameter: 60 mm		
Peak thrust	18 Nm	24 Nm	24 Nm
Nominal torque	9 Nm	9 Nm	12 Nm
Speed (no load)	11 m/min	11 m/min	13 m/min
Nominal torque speed	8.5 m/min	8.5 m/min	8.5 m/min
Operating cycles	20 cycles/hour	20 cycles/hour	25 cycles/hour
Maximum continuous operating time	4 minutes		
Nominal power supply	230 V - 50/60 Hz	230 V - 50/60 Hz	120 V - 60 Hz
Nominal power	300 W	350 W	350 W
Electrical isolation class	1 (a safety grounding system is required)		
Flasher output	For 1 flasher 230V~ auto-intermittent (120V~ on V1 / version motor) (max 60W)		
STOP input	For NC contacts (a variation with respect to the closed state causes the command “STOP”).		
Sbs input	For NO contacts (closing of the contact causes the “STEP-BY-STEP” command)		
PHOTO Input	For NC contacts (a variation with respect to the closed state causes a manoeuvre reversal during the closure due to the detection of the photocell beam interruption)		
Radio AERIAL Input	52 Ω for RG58 or similar type of cable		
Radio receiver	Incorporated		
Operating temperature	-20°C ... 55°C		
Protection class	IP 44		
Dimensions (mm) and weight	330 x 210 x 303 h; 11 kg		
Integrated radio receiver			
Type	4 channel receiver for incorporated radio command		
Frequency	433.92MHz		
Transmitter compatibility	FLO, FLOR, O-CODE, HCS SMILO coding		
Transmitters memorized	Up to 100 if memorized in mode 1		
Input impedance	52Ω		
Sensitivity	better than 0.5 μV		
Range of the transmitters	From 100 to 150 m, this distance can vary in the presence of obstacles and electro-magnetic interference and is affected by the position of the receiving aerial		
Outputs	For commands as per tables 8 and 9 of paragraph 7.3 - Integrated radio receiver		
Operating temperature	-20°C ... 55°C		

EU Declaration of conformity

and declaration of incorporation as “partly completed machinery”

Declaration in accordance with the following Directives: 2014/30/EU (EMC); 2006/42/EC (MD) annex II, part B

Note: The contents of this declaration correspond to declarations in the official document filed in the offices of Nice S.p.a. and, in particular, the latest version thereof available prior to the printing of this manual. The text herein has been re-edited for editorial purposes. A copy of the original declaration can be requested from Nice S.p.A. (TV) I.

Declaration number: **532/ROX** Revision: **1** Language: **EN**

Manufacturer’s Name: NICE S.p.A.
Address: Via Callalta, 1, 31046 Oderzo (TV) Italy
Person authorized to compile the technical documentation: NICE S.p.A.
Type of product: Electromechanical gearmotor
Model / Type: ROX600, ROX1000, ROX1000/V1
Accessories: Please refer to the catalogue

The undersigned Roberto Griffa, as Managing Director, hereby declares under his own responsibility that the product identified above complies with the provisions of the following directives:

- Directive 2014/53/EU (RED)
  - Health and Safety (art. 3(1)(a)) EN 62479:2010
  - Electrical safety (Art. 3(1)(a)) EN 60950-1:2006+A11:2009+A12:2011+A1:2010+A2:2013
  - Electromagnetic compatibility (Art. 3(1)(b)) EN 301 489-1 V2.2.0:2017, EN 301 489-3 V2.1.1:2017
  - Radio spectrum (Art. 3(2)): EN 300 220-2 V3.1.1:2017

In addition, the product complies with the following directive in accordance with the provisions applicable to “partly completed machinery” (Annex II, part 1, section B):

2006/42/EC MACHINE DIRECTIVE OF THE EUROPEAN PARLIAMENT AND COUNCIL OF 17 May 2006 replacing the 95/16/EC Directive (recast).
– It is hereby declared that the relevant technical documentation has been compiled in accordance with Annex VII B of Directive 2006/42/EC and that the following essential requirements have been applied and fulfilled:
1.1.1- 1.1.2- 1.1.3- 1.2.1-1.2.6- 1.5.1-1.5.2- 1.5.5- 1.5.6- 1.5.7- 1.5.8- 1.5.10- 1.5.11
– The manufacturer undertakes to transmit, in response to a reasoned request by the national authorities, relevant information on the “partly completed machinery”. This shall be without prejudice to the intellectual property rights of the manufacturer of the partly completed machinery.
– Should the “partly completed machinery” be put into service in a European country with an official language different to the one used in this declaration, a translation into that language must be provided by the person bringing the machinery into the language area in question.
– The “partly completed machinery” may not be put into service until the final machinery into which it is to be incorporated has been declared in conformity with the provisions of Directive 2006/42/EC, where appropriate.

The product also complies with the following standards:
EN 60335-1:2012+A11:2014, EN 62233:2008
EN 60335-2-103:2015, EN 62233:2008, EN 61000-6-2:2005, EN 61000-6-3:2007+A1:2011

Place and Date:
Oderzo, 05/09/2017

Mr. Roberto Griffa
(Managing Director)

Operation manual
(to be given to the final user)

- When you first use the automation, the installation technician must inform you about the origin of the residual risks and you must take time to read this user manual.
- Make sure to keep this user manual (delivered by the installation technician) for future reference and for handover to any further owner of the automation.
- Your automation system is a machine that will faithfully execute your commands; unreasonable or improper use may generate dangers: do not operate the system if there are people, animals or objects within its range of operation.
- **Children:** automation systems guarantee high levels of safety and security. They are equipped with detection devices that prevent movement if people or objects are in the way, guaranteeing safe and reliable activation. However, it is advisable to ensure that children do not play in the vicinity of the automation; remote controls should always be kept out of reach. It is not a toy!
- **Checking the system:** in particular all cables, springs and supports to detect possible imbalance and signs of wear or damage.

  – Check that the system is safe every month using safety equipment with sensitive edges.

  – Do not use the automation if repairs or adjustments are required; any fault or an incorrectly balanced gate may lead to physical injury.
- **Malfunctions:** if the automation is malfunctioning, shut off its power supply. Never attempt any repairs; contact your local installer for assistance.

  If the safety devices do not work properly or are out of service, it is possible TO:

  - unlock the gearmotor as described in “Manually unlocking the gearmotor”, allowing the gate to be opened and closed manually;

  - control the gate anyway in the following way:

  01. Activate the gate control with the transmitter. If the safety devices allow it, the gate will open normally, otherwise the control must be activated (without releasing it) again within 3 seconds.

  02. After about 2 seconds, the gate will start to move in “hold-to-run” mode, that is the gate will continue to move so long as the control is pressed and will stop on its release.

  Modify neither the system nor the automation programming and adjusting parameters: responsibility lies with your installer.

  – The final test, periodic maintenance operations and any repairs must be documented by the person who has performed them; these documents must remain under the custody of the owner of the system.

  Important: have the system repaired as soon as possible if the safety equipment is malfunctioning. Transit is admitted only if the gate is completely open and stationary.
- **Disposal:** At the end of the automation’s lifetime, ensure that it is disposed by qualified personnel and that the materials are recycled or scrapped according to current local regulations for this category of product.
- **Maintenance:** As with all machinery, the automation requires periodic maintenance to ensure optimal operation, extended lifetime and complete safety. Arrange a periodic maintenance schedule with your installation technician. Nice recommends that maintenance checks be carried out every six months for normal domestic use, but this interval may vary depending on the intensity of use. Only qualified personnel are authorised to carry out checks, maintenance operations and repairs.
- **Manually unlocking the gearmotor**

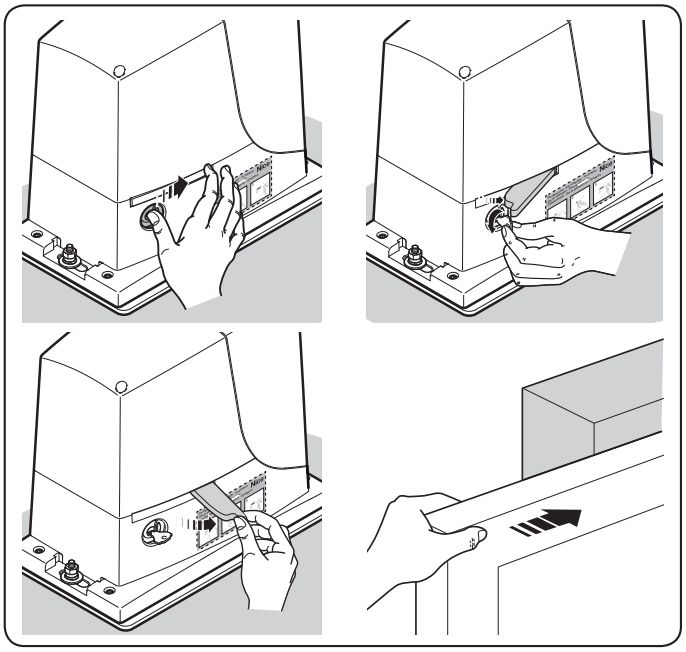

- **Manually locking the gearmotor**

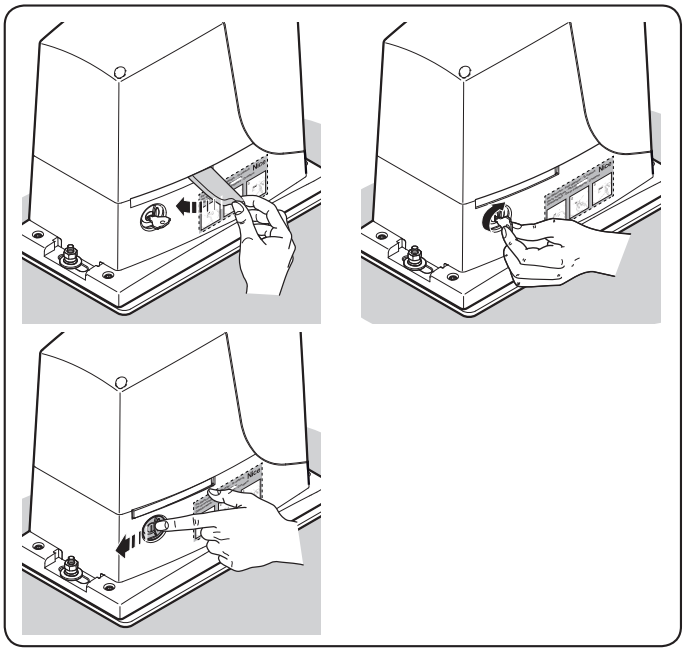

IDV0658A00MM_15-10-2018_DIGITAL VERSION

Nice S.p.A.
Via Callalta, 1
31046 Oderzo (TV)
info@niceforyou.com

www.niceforyou.com